Centre for
Low Carbon Futures
2050

Carbon Capture: A Technology Assessment

Evaluation of Performance and Cost of Combustion Based Power Plants with CO_2 Capture in the UK

AUTHORS

Elena Catalanotti
Mohamed Pourkashanian

Energy Technology & Innovation Initiative (ETII),
University of Leeds

Publication date

July 2012

Report no.

009

Publisher

The Centre for Low Carbon Futures 2012
For citation and reprints, please contact
the Centre for Low Carbon Futures.

This report provides an assessment of the technical and economic performances of Carbon Capture and Storage (CCS) technologies for three sectors of UK power generation in order to establish the best technology option currently available. The application of different technologies for carbon capture is also considered as well as case studies to compare the employability of alternatives to dedicated coal combustion.

UNIVERSITY OF LEEDS

CONTENTS

Report no: 009

Publication date: July 2012

1 INTRODUCTION AND SCOPE

In order to quickly meet the carbon dioxide emission target of an 80% reduction from the 1990 levels by 2050, Carbon Capture and Storage (CCS) technologies are considered as a medium term solution for energy generation, while waiting for other renewable associated technologies to mature and be deployed on a large scale. This technology is still at a pilot scheme level and it is expected to be fully deployed by 2020 or even 2030.

The use of biomass is also considered as an additional solution for CO_2 mitigation on a shorter timescale, by replacing coal or introducing biomass for co-firing in existing power plants. The Bioenergy Review, published in December 2011 by the Committee on Climate Change, highlights the need to employ biomass to produce about 10% of the total UK primary energy in combination with CCS in order to meet the 2050 emissions targets [1]. The percentage would have to rise significantly if CCS is not considered a feasible option, leading to land use change beyond currently estimated sustainability limits. In this case bioenergy technology breakthroughs would be necessary, e.g. the use of algae. Although still a fossil fuel, natural gas is considered as another viable alternative to coal because of its low emissions per unit of energy produced, despite the concerns related to security of supply arising from geopolitics. However, a consistent study of the costs associated with the use of different technologies based on common assumptions is necessary in order to make appropriate choices. Only a few studies are available on this subject and they usually refer to US power stations [2-5]. A recent review of data available in literature can be found on the IEA website [6]. Only one report has been published on the UK market by DECC [7] and there is a need to provide more data for reasonable comparisons.

The scope of this report is to assess both the technical and economic performances of the introduction of CCS technologies on three sectors for power generation in the United Kingdom: Pulverised Fuel (PF), Integrated Gasification Combined Cycle (IGCC), and Natural Gas Combined Cycle Gas Turbine (NG-CCGT). The calculation of the costs is based on today's state of technologies development. The technologies are considered as nth of a kind when no CCS is applied, since they are all fairly developed, while they are considered first of a kind when CCS is introduced. Therefore, costs related to CCS units are calculated assuming a higher contingency cost than that of the process with no CCS. However, CCS costs are expected to drop once fully deployed. The study of PF and IGCC technologies also includes a comparison of the employability of fuel alternatives to dedicated coal combustion. Therefore, in these case studies, the performances of plants using UK bituminous coal were compared with those obtained by co-firing coal and biomass in the form of wood pellets in mixtures of 80% coal and 20% biomass on a lower heating value basis.

The application of different technologies for carbon capture is also reported:

- For PF plants, two CO_2 capture techniques have been compared: Post-Combustion Capture (PCC) with MEA solutions and Oxy-fuel Combustion Capture (OCC) with integrated Air Separation Unit (ASU). Additional studies have been performed using newer technologies for post-combustion capture using ammonia solutions or membranes, and the results are shown in a separate section. However, these studies are still under investigation as cost parameters are still uncertain.
- CCS technology on IGCC systems consisted of pre-combustion capture using Selexol absorber.
- In NG-CCGT plants, PCC systems based on MEA or ammonia capture technologies have been employed.

Environmental control techniques have also been also considered in the model where appropriate, including in-furnace NO_x control; particulate separation units of Electrostatic Precipitator (ESP) and Flue Gas Desulphurization (FGD) units for SO_x removal in the PF plants; and sulphur control unit using Selexol scrubber in IGCC. No control units were considered in the NG-CCGT because they are not necessary. Each case was studied with a capacity factor of 85%; however, different scenarios with lower capacity factors have also been investigated given that in the UK, coal based power plants recently run at reasonably low loads because of environmental regulations and increasing interest in renewable energy sources. Uncertainty analyses have also been performed in order to investigate different fuel cost scenarios. The techno-economic calculations have been performed using the Integrated Environmental Control Model (IECM), developed at Carenegie-Mellon University as part of a DOE project [8]. The program calculates the costs and performance associated to different technology options using a module system, allowing the user to construct the power plant choosing the desired level of complexity. The calculation models have been developed on the basis of values reported in the literature and mostly available on the NETL website. The IECM is therefore used here to identify the limitations related to the use of certain technologies, and what are the best options based on present and future assumptions, with a particular eye on the consequences of the construction of power plants with CCS devices.

2 PROCESS DESCRIPTION

2.1 PULVERISED FUEL (PF)

A brief description of the components used in this study for the modelling of pulverised fuel fired power stations is reported below. The base plant, together with the environmental control units, is common to all the cases; the carbon capture techniques are discussed separately in sections 2.1.2 and 2.1.3.

2.1.1 Base Plant

The flow diagram presented in Figure 1 shows the base plant used for comparison in this study. The ESP particulate control system and FGD SO_x removal unit are included. As mercury removal is not currently mandatory in the UK, no control has been added at this stage. The bottom ash is disposed of in a pond, together with the contaminated waste from the FGD unit. In-furnace NO_x control is used, with a low NO_x burner system. In the UK, by 2016, the large coal-fired power plants will require SCR technology, or they will opt out to operate for a limited number of hours annually [9]. However, in the current version of the IECM model, application of the SCR unit for the oxy-coal combustion is not possible and the only NO_x treatment is through in-furnace control with low NO_x burners.

2.1.2 Post-Combustion Capture options (PCC)

In a PCC plant, a unit for carbon capture and compression is added after the gas cleaning process. In this specific case it is after the FGD unit, as shown in Figure 2.

In this study, three types of post-combustion capture techniques are compared in terms of economical and technical performances:

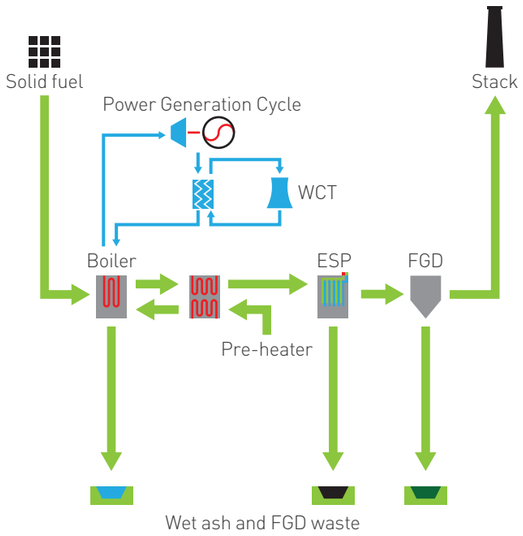

Figure 1. Base plant diagram with the environmental control units included.

MEA TECHNOLOGY: MONO-ETHANOLAMINE (MEA) IS THE MOST DEVELOPED TECHNIQUE, BASED ON SOLVENT CO_2 STRIPPING THROUGH A CHEMICAL REACTION OF ABSORPTION OF THE CO_2 FOLLOWED BY THE REGENERATION OF THE SOLVENT IN DEDICATED TOWERS AND CO_2 RECOVERY AND COMPRESSION. THE FLUE GAS MUST FIRST BE CLEANED, SINCE THE PRESENCE OF REACTIVE IMPURITIES SUCH AS SULPHUR, NITROGEN OXIDES, AND PARTICULATE MATTER MAY COMPROMISE THE PROCESS AND IRREVERSIBLY POISON THE SOLVENT. FOR THIS REASON THE PROCESS MUST OCCUR AFTER THE ESP AND THE FGD SYSTEMS. THE FLUE GAS IS THEN COOLED TO ABOUT 40-50°C IN A DIRECT CONTACT COOLER (DCC) BEFORE ENTERING THE AMINE SYSTEM IN ORDER TO ENHANCE THE ABSORPTION REACTION. TWO PROCESSES BASED ON MEA ABSORPTION/ STRIPPING ARE AVAILABLE TODAY: THE FLUOR DANIEL ECONAMINE FG USING MEA SOLUTIONS OF 30% WT, AND THE ABB LUMMUS CREST MEA PROCESS, WHICH USES 15-20% WT. SOLUTIONS. THE FIRST OPTION USES AN OXYGEN INHIBITOR TO REDUCE CORROSION AND SOLVENT DEGRADATION, WHILE THE SECOND SYSTEM TAKES ADVANTAGE OF THE LOWER CONCENTRATION AND DOES NOT NEED ANY INHIBITOR. THE PRESENCE OF THE OXYGEN INHIBITOR LIMITS THE USE OF THE FG PROCESS TO FLUE GAS CONTAINING LOW CO AND H_2 CONTENTS. HOWEVER, THE LOWER SORBENT CONCENTRATION IN THE ABB PROCESS LEADS TO ECONOMIC DISADVANTAGES IN TERMS OF GREATER CAPITAL REQUIREMENTS DUE TO LARGER EQUIPMENT SIZE AND HIGHER ENERGY REQUIREMENTS ASSOCIATED WITH A HIGHER AMOUNT OF DILUTION WATER PER UNIT OF SORBENT. BOTH THE PROCESSES HAVE ALREADY BEEN PROVEN FOR COAL-FIRED FLUE GAS APPLICATIONS AT COMMERCIAL SCALE.

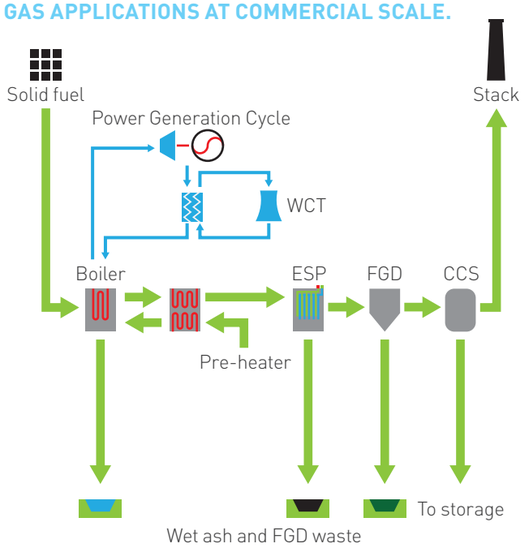

Figure 2. Base plant diagram with post-combustion capture and environmental control units included.

NH_3 TECHNOLOGY: IT USES NH_3 INSTEAD OF MEA, ALTHOUGH THE PROCESS IS THE SAME. THE ADVANTAGE IS IN THE USE OF AN AQUEOUS SOLUTION THAT REQUIRES LESS ENERGY FOR REGENERATION AS THE CO_2 ABSORPTION REACTION INVOLVING MEA IS MUCH MORE EXOTHERMIC THAN THAT USING NH_3. MOREOVER MEA SYSTEMS HAVE BEEN FOUND TO BE HIGHLY CORROSIVE, A PROBLEM THAT MAY BE AVOIDED WITH THE USE OF AMMONIA SOLUTIONS. NH_3 SYSTEMS CAN ALSO CAPTURE SO_2 AND NO_2 GASES INCLUDED IN THE FLUE GAS WITH HIGH EFFICIENCIES AND IT CAN REACH HIGHER CO_2 CAPTURE EFFICIENCIES.

MEMBRANES: MEMBRANES ARE PROPOSED AS AN ALTERNATIVE TO SOLVENT BASED POST-COMBUSTION. THE ADVANTAGES MAY BE IN THE COST SINCE THIS TECHNOLOGY UTILISES PASSIVE SEPARATION OF THE GASES, THUS AVOIDING THE SOLVENT REGENERATION STEP, WHICH REDUCES THE EFFICIENCY OF THE PROCESS. THERE IS ALSO NO HAZARDOUS WASTE OF WHICH TO DISPOSE. THE MAJOR LIMITATIONS AT THE MOMENT RELATE TO THE MATURITY OF TECHNOLOGY, SINCE MEMBRANE SYSTEMS HAVE NOT, AS YET, BEEN TESTED ON LARGE SCALE POWER PLANTS AND THE COSTS ARE THEREFORE STILL HIGH. THE DEGREE OF SEPARATION EFFICIENCY IS ALSO RELATIVELY LOW, AND THEREFORE STREAM RECYCLING MAY BE NECESSARY TO ACHIEVE THE DESIRED PURITY.

2.1.3 Oxy-fuels Combustion Capture (OCC)

Oxy-fuel combustion techniques are based on a different principle to post-combustion systems. The fuel is burnt in an enriched oxygen atmosphere in order to produce almost only CO_2 and H_2O. This technique also allows low NO_x formation as only a small amount of N_2 is present in the combustion chamber. The fuel is mixed with the oxidant stream produced by an Air Separation Unit (ASU) and the flue gas is treated in ESP and FGD units. Part of cleaned flue gas (about 70%) is then recycled to be mixed with oxygen and sent back to the boiler. This is necessary in order to avoid too high temperatures in the boiler. The remaining flue gas, which consists of CO_2 and water vapour with trace elements, is sent to the direct contact cooler to separate the CO_2 from the water which condensates. The CO_2 is then sent to the compressor and storage. A schematic of this process is shown in Figure 3.

All the techniques analysed in this study are suitable for retrofitting. As in post-combustion systems, the CO_2 capture unit must only be added to existing plants after the FGD. This is in contrast to the case of oxy-fuel combustion where the ASU must be added prior to the preheater device together with a recycling system and the water condenser, without any modification to the boiler or other existing sections of the power plant.

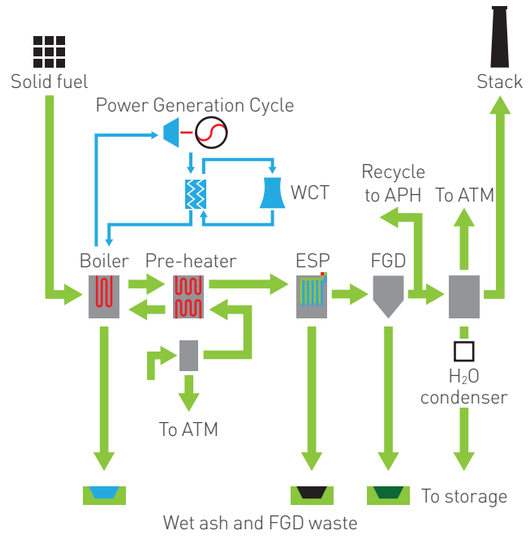

Figure 3. Base plant flow diagram of oxy-fuel combustion with the environmental control units included.

2.2 INTEGRATED GASIFICATION COMBINED CYCLE (IGCC)

The IGCC technique uses solid fuel and converts it into a syngas. This is burnt to produce a hot flue gas, which passes through a gas turbine and generates electricity. The base plant is therefore very different from the one described for the pulverised fuel (PF), as well as the environmental system units associated to it. The addition of CO_2 capture units slightly modifies the layout of the plant, as described below, although no major alterations are required. Figures 4 and 5 show a typical flow diagram for this type of technology both with and without CO_2 capture.

A General Electric (GE) entrained-flow gasifier is used to convert the solid fuel into syngas. The fuel (coal, biomass or mixtures) is mixed with water to form the slurry, which is fed to the gasifier and converted to syngas using oxygen produced by an air separation unit. The portion of fuel not gasified (the slag), is mainly composed of ash and water and sent to the landfill to be disposed of. If CCS is being employed, the syngas is transferred to a water gas shift reactor used to convert the CO into CO_2 to improve the efficiency of the CO_2 removal process. If there is no CCS, the water gas shift reactor is not necessary. The sulphur removal process follows next using a Selexol acid gas separation unit. This solvent is selected because Selexol can combine sulphur and CO_2 removal. In the Selexol unit, sulphur in the form of H_2S and COS is removed from the syngas and sent to a Claus plant and a Beavon-Stretford tail gas treatment unit for conversion to elemental sulphur which can be recovered and sold as a by-product.

The sulphur free syngas can undergo a second stage of the Selexol process for the pre-combustion CO_2 capture. A system of CO_2 stripping is used to recover the solvent and collect the CO_2, which is then compressed and geologically stored. The clean syngas, now consisting nominally of pure hydrogen, is fed to the combustor where it is mixed with air and burns to produce hot combustion products that enter the gas turbine and generate heat for the steam cycle. Part of the heat stored in the steam is not converted to energy, therefore it needs to be transferred to the atmosphere through a Cooling System, and the steam condenses back to be reused in the turbine.

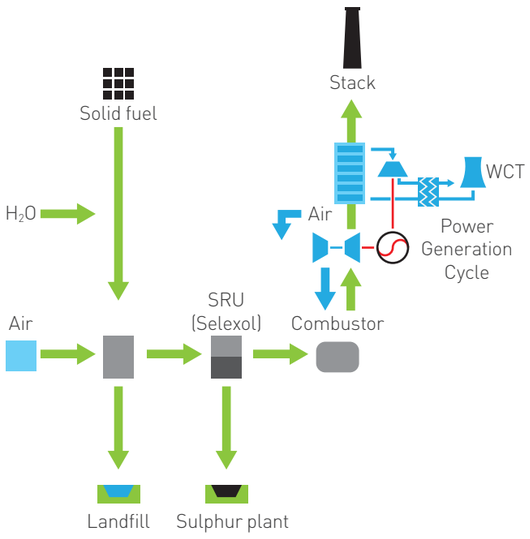

Figure 4. Flow diagram of an IGCC system without CCS with the environmental control units included.

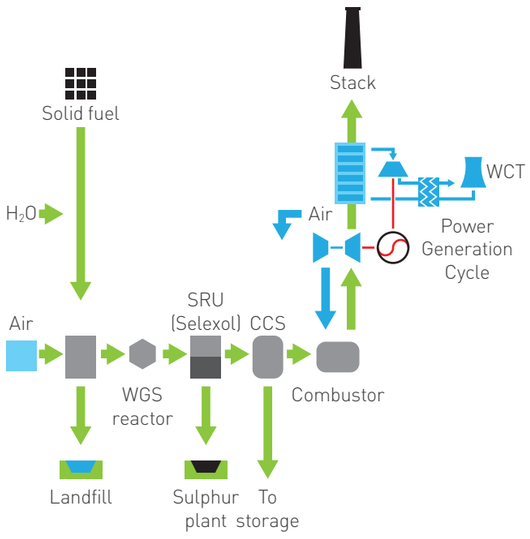

Figure 5. Flow diagram of an IGCC system with CCS and with the environmental control units included.

2.3 NATURAL GAS COMBINED CYCLE (NG-CCGT)

NG-CCGT plants burn natural gas extracted from underground and generate electricity by the use of both a gas turbine and a steam turbine, as in the IGCC, reaching high efficiencies of up to 50% of the total thermal energy input. These types of plant do not need any of the pollutant control units previously described in section 2.1.1, as the natural gas is a clean mixture of hydrocarbons, mainly methane, burning with no production of particulates and containing no sulphur. Figures 6-7 show the layout of a typical NG-CCGT plant both without and with post-combustion CCS.

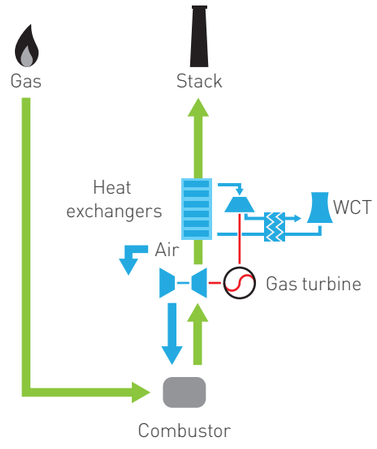

Fig 6. Flow diagram of an NGCC system without CCS (environmental control units not necessary).

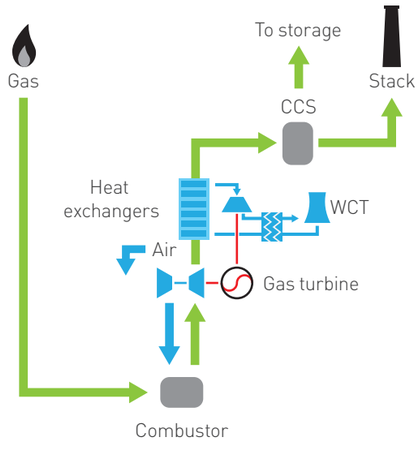

Figure 7. Flow diagram of an NG-CCGT system with CCS.

3 ECONOMIC PARAMETERS

The economic data in this report are predictions of the costs related to the technologies evaluated and have been generated by using the IECM software [8]. Details of the economic calculations [10] are presented in this section, with specific attention to the economic items that this work is focused on. As a general consideration, costs are associated to the thermodynamic calculations performed by the program, calculating the flow rates of the fuels on the basis of their energy content, as well as reagent consumption based on pollutant production. The costs are related to the size of the plant and the size of the different pollutant control units.

A number of entries have been considered in this work:

CAPITAL COSTS: THE CAPITAL COSTS OF THE BASE PLANT ARE DIRECTLY DEPENDENT ON THE SIZE OF THE PLANT, EXPRESSED AS CAPACITY IN MW, AND THE FUEL TYPE. THE CAPACITY OF THE PLANT INFLUENCES THE BOILER SIZE, AND THEREFORE THE COSTS OF BUILDING. THE TYPE OF FUEL, ITS HEATING VALUE AND ASH CONTENT, INFLUENCE THE DIMENSIONS OF THE FURNACE AND ASH HANDLING EQUIPMENT. THE COST DATA ARE BASED ON A MODEL CONSTRUCTED ON THE COSTS OF EXISTING PLANTS IN THE US AND ADJUSTED FOR DIFFERENT SIZES THROUGH A SCALE CORRELATION. THE COSTS OF THE OTHER UNITS THAT THE OVERALL PLANT CONSISTS OF ARE CALCULATED SEPARATELY BUT STILL ON THE BASIS OF THE TECHNICAL PARAMETERS INDICATED AS INPUT AND THE FLOWS CALCULATED BY THE PROGRAM. THE TOTAL CAPITAL COST REQUIRED (TCR) IS CALCULATED AS THE SUM OF THE COSTS OF EACH UNIT.

OPERATION & MAINTENANCE COSTS: THE O&M COSTS CONSIST OF FIXED AND VARIABLE COSTS. THE FIXED OPERATING COSTS INCLUDE LABOUR, MATERIAL AND ADMINISTRATIVE LABOUR. THE VARIABLE COST IS ASSOCIATED TO THE FUEL COST, WATER COST, BOTTOM ASH DISPOSAL AND REAGENT COST. THESE COSTS ARE BASED ON THE RATE OF FUEL CONSUMED AND ITS COMPOSITION, WHICH AFFECTS BOTTOM ASH DISPOSAL AND POLLUTANT RATE PRODUCTION.

COST OF ELECTRICITY (COE): THE COE IS CALCULATED BY DIVIDING THE TCR AND THE TOTAL O&M COSTS BY THE KWH PRODUCED BY THE PLANT. THE LEVELISATION OF THE TCR IS BASED ON A 30 YEAR LIFE TIME OF THE PLANT, APPLYING A FIXED CHARGE FACTOR (FCF) FOR TAKING INTO ACCOUNT TAXES AND INFLATION FACTORS. THE COE IS STRICTLY DEPENDENT ON THE NUMBER OF HOURS THE PLANT IS EFFECTIVELY FUNCTIONING OVER THE YEAR, EXPRESSED AS THE CAPACITY FACTOR, WHICH IS THE RATIO OF THE ACTUAL ANNUAL OUTPUT OF THE PLANT TO THE MAXIMUM NOMINAL OUTPUT.

$$\text{COE} = \frac{\text{Total costs}}{(\text{MW}_{net} \times 10^{-3}) \times \text{capacity factor} \times 8760}$$

4 UNCERTAINTY ANALYSES

A number of factors can affect the cost analyses, including the cost of the fuels and operating time of the plant, as well as the application of taxes on CO_2. These are variable, dependent on the market and on future polices taken in the power sector. They are therefore susceptible to fluctuations. An investigation into the effects of the variation of these parameters on the cost of electricity is proposed in this study. With this aim, a triangular distribution has been chosen for the probability function, where a finite range is defined by a maximum and a minimum, along with the 'likeliness' value, the same as those used in this report to generate the deterministic analyses [10,11].

5 INPUT ASSUMPTIONS

The financial and most technical data used in this study are common for all the cases investigated, with the only differences being the composition of fuels and their prices and, of course, specific entries that apply to each particular technology. In order to produce an evaluation of the performance of the power plants in the UK, a standard British bituminous coal has been chosen for this study. Co-firing systems have also been investigated to understand the effects of the introduction of a renewable biomass fuels in coal based systems. Since this study focuses on large scale power plants, the biomass chosen is in the form of wood pellets with a low moisture content and a relatively high calorific value, as only pellets or torrified biomass can be used in such large scales. This is due essentially to the limitations of high moisture and ash composition of the untreated biomass, which can cause ignition and combustion problems, as well as contamination of the sites due to the high alkaline content, which relates to a low ash melting temperature, translating into increased risks of agglomeration and deposits in the boiler and requires increased maintenance costs. Blends in a range of 10 wt% to 20 wt% of biomass have been considered suitable for PF plants and IGCC systems [12,13] when forest waste biomass is used. Higher biomass share are however considered applicable [14]. An extreme case is investigated here, where the blend is made of 75 wt% coal and 25 wt% biomass, corresponding to a fraction of 80:20 % on a Lower Heating Value (LHV) basis. The costs are those recently published in financial reports [15,16]. Costs generated in the IECM were based on 2010 USD; a conversion factor of 0.64 has been applied in the conversion from 2010 USD into 2011 GBP. The financial assumptions were based partially on data suggested by the NETL in DOE reports previously published [8] and are based on US plants, and partially on data provided by E.ON relating to UK plants. Details of the financial and technical assumptions are summarised in Tables 1-4.

	COAL	BLEND
Fuel Cost (£/GJ)	1.97	2.8
Higher Heating Value (MJ/kg)	24.61	23.13
FUEL ULTIMATE ANALYSIS (WT %)		
Carbon	59.60	55.78
Hydrogen	3.800	3.998
Oxygen	5.500	15.03
Chlorine	0.2000	0.1524
Sulphur	1.800	1.350
Nitrogen	1.500	1.170
Ash	15.60	11.74
Moisture	12.00	10.78
ASH ULTIMATE ANALYSIS (WT %)		
SiO_2	54.30	44.11
Al_2O_3	26.30	20.53
Fe_2O_3	7.500	6.848
CaO	2.300	10.35
MgO	1.700	2.955
Na_2O	1.900	1.499
K_2O	3.600	8.719
TiO_2	1.100	0.9244
MnO_2	0.0	0.0
P_2O_5	0.300	1.580
SO_3	1.000	2.455
	NATURAL GAS	
Fuel Cost (£/GJ)	3.6	
Higher Heating Value (MJ/kg)	53.89	
FUEL ULTIMATE ANALYSIS (VOL %)		
Methane (CH_4)	83.4	
Ethane (C_2H_6)	15.8	
Nitrogen (N_2)	0.8	

Table 1. Fuel costs and compositions. Coal is a typical UK bituminous, and the blend contains 75 wt% of the UK coal and 25 wt% of wood pellets biomass, corresponding to 80:20 % on a Lower Heating Value (LHV) basis.

OVERALL PLANT				
Gross power output (MW)	650			
Capacity factor (%)	85			
Fixed charge factor (%)	15			
Ambient air temperature (avg., °C)	20			
Ambient air pressure (avg., bars)	1			
Relative humidity (avg., %)	50			
OPERATIONAL COSTS				
Labour rate (£/hr)	20			
Operating shifts (per day)	4			
Water cost (£/m^3)	192			
BASE PLANT				
Boiler efficiency (%)	88.5			
Gas temperature at air preheater exit (°C)	130			
Gas temperature at economiser exit (°C)	320			
Low-NO_x burner efficiency (for NO_x removal, %)	50			
Low-NO_x burner O&M cost (% of TCC)	1.5			
ESP				
Power requirement (% of MW_g)	0.3			
Removal efficiency (%)	98.9			
Total O&M cost (% of TCC)	2			
FGD				
Reagent type	Limestone			
Reagent purity (%)	93			
Reagent cost (£/tonne)	10			
Power requirement (% of MW_g)	1-3.5 (depending on SO_2 levels)			
Maximum SO_2 removal efficiency (%)	98			
Total O&M cost (% of TCC)	4.3			
ASU (OCC ONLY)				
Power requirement (% of MW_g)	14.5			
Power requirement (kWh/tonne of O_2)	230			
O_2 purity (%)	95			
CO_2 capture efficiency (%)	94			
	PCC-ABB	**PCC-FG**	**PCC-NH_3**	**PCC-MEMBR**
CO_2 capture system	MEA	MEA	Ammonia	Membrane
CO_2 capture efficiency (%)	94	94	94	94
Reagent cost (£/tonne)	1472	1472	300	-
Sorbent concentration (wt %)	20	30	14.4	-
Membrane module cost (£/m^2)	-	-	-	32
Power requirement (% of MW_g)	15	10	16.7	33.6

Table 2. Operating parameters and costs assumptions for the pulverised fuel cases analysed.

OVERALL PLANT	
Gross power output (MW)	650
Capacity factor (%)	85
Fixed charge actor (%)	15
Ambient air temperature (avg., °C)	20
Ambient air pressure (avg., bars)	1
Relative humidity (avg., %)	50
OPERATIONAL COSTS	
Labour rate (£/hr)	20
Operating shifts (per day)	4
Water cost (£/m^3)	192
GASIFIER AREA	
Type of gasifier	GE
Power requirement (% of MW_g)	1.2
Gasifier temperature (°C)	1340
Gasifier pressure (bars)	40
ASU	
Power requirement (% of MW_g)	14.5
Power requirement (kWh/tonne of O_2)	230
O_2 purity (%)	95
POWER BLOCK	
Gas turbine model	GE 7FA
Turbine inlet temperature (°C)	1330
Adiabatic turbine efficiency (%)	84
SULPHUR CONTROL	
Reagent type	Selexol
Power requirement (% of MW_g)	0.6
Removal efficiency (%)	98
Reagent cost (£/kg)	3865
Sulphur recovery systems	Claus & Beavon Stretford Plants
Total O&M cost (% of TCC)	2
CARBON CAPTURE	
Reagent type	Selexol
Power requirement (% of MW_g)	7.6
Absorber capture efficiency (%)	98
Actual overall process capture (%)	94
Total O&M cost (% of TCC)	5

Table 3. Operating parameters and costs assumptions for the IGCC cases analysed.

OVERALL PLANT			
Gross power output (MW)	650		
Capacity factor (%)	85		
Fixed charge factor (%)	15		
Ambient air temperature (avg., °C)	20		
Ambient air pressure (avg., bars)	1		
Relative humidity (avg., %)	50		
OPERATIONAL COSTS			
Labour rate (£/hr)	20		
Operating shifts (per day)	4		
Water cost (£/m^3)	192		
POWER BLOCK			
Gas turbine model	GE 7FA		
Turbine inlet temperature (°C)	1330		
Adiabatic turbine efficiency (%)	84		
	CCS-ABB	**CCS-FG**	**CCS-NH_3**
CO_2 capture system	MEA	MEA	Ammonia
CO_2 capture efficiency (%)	94	94	94
Reagent cost (£/tonne)	1472	1472	300
Sorbent concentration (wt %)	20	30	14.4
Membrane module cost (£/m^2)	-	-	-
Power requirement (% of MW_g)	9	5	14.5

Table 4. Operating parameters and cost assumptions for the NG-CCGT cases analysed.

6 RESULTS: DETERMINISTIC CALCULATIONS

6.1 POST-COMBUSTION CAPTURE OPTIONS: PF

A comparison of the available options for post-combustion carbon capture applied to pulverised coal power stations is presented in this section. The best option, in terms of costs and performances, is identified and compared with the other power generation processes in the next section. As discussed previously in Section 3, the capital costs are directly influenced by the fuel type and its composition, as well as by the size of the plant and the process described. In this study the size of the plant has been kept constant between the different capture scenarios. Therefore, the capital cost will only be dependent on other factors, related to the specific process analysed, such as the units and flow rates required.

Figure 8 shows the capital required for the construction of the power plant with the specifications considered in this study, normalised by the net power produced. The addition of the CCS structure significantly increases the specific CAPEX of the PF plant, but with a different extent depending on the process chosen. It is observed that the specific CAPEX are 2.5 times higher when adding post-combustion CCS with the ABB amine system, as it is in the case where membranes are used, while it is doubled when using the FG amine system. This difference is mainly due to the different amount of energy spent in the different processes. The ABB amine systems consume a considerable amount of energy for sorbent regeneration, employing levels of heat to facilitate the CO_2 extraction, therefore reducing the power output. Moreover, the lower concentration of the reagent generally requires columns and equipments in larger sizes, as mentioned in the Section 5. Membrane systems also result in a severe energy penalty because of the feed compressors used to push the flue gas through the membrane.

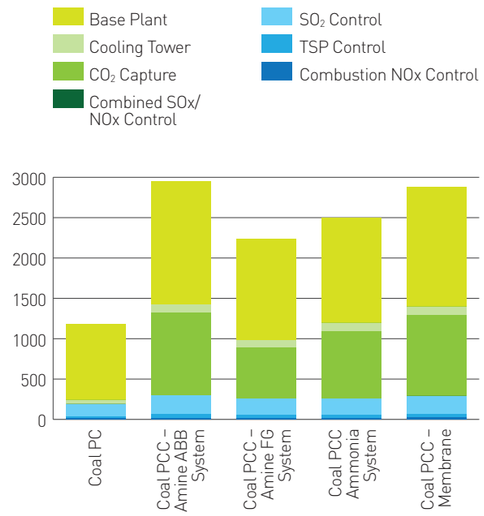

Figure 8. Total capital required per unit of energy produced from a PF plant compared with the post-combustion options available for the same plant. Breakdown of the costs of single units is included. Costs are expressed in constant 2011 £/kW-net.

Further differences can be identified in the O&M costs, as shown in Figure 9 for both the fixed and variable O&M costs:

FIXED O&M COSTS INCREASE BY 80% WHEN USING AMINE POST-COMBUSTION TECHNOLOGY, SUCH AS LESS CONCENTRATED MEA SOLUTIONS (ABB PROCESS), BUT THEY ONLY INCREASE BY LESS THAN 55% WHEN USING MORE CONCENTRATED SOLUTIONS, AS IN THE FG PROCESS. AN INCREMENT OF NEARLY 60% OCCURS WHEN USING AMMONIA SOLUTIONS, WHILE THE USE OF MEMBRANES RESULTS IN THE CHEAPEST OPTION WITH A RISE IN COSTS OF LESS THAN 50%. THIS TREND IS DETERMINED BY THE INITIAL CAPITAL INVESTMENT AND THIS IS BECAUSE THE FIXED COSTS INCLUDE THE OPERATING, MAINTENANCE, ADMINISTRATIVE LABOUR AND THE MAINTENANCE MATERIALS, AND THESE COSTS ARE PROPORTIONAL TO THE SIZE OF THE PLANT.

VARIABLE COSTS CONSIST OF THE COST OF THE FUEL AS WELL AS THE COSTS OF THE MAKEUP SORBENT, CHEMICALS AND OTHER MISCELLANEOUS COSTS. THEREFORE, THEY ARE SEVERELY INFLUENCED BY THE AMOUNT OF FUEL USED, AS WELL AS BY THE TYPE OF PROCESS AND THE AUXILIARY PRODUCTS USED. THEY ALSO ACCOUNT FOR THE ELECTRICITY USED TO RUN THE PROCESS. THEREFORE, AS EXPECTED, THE USE OF LESS CONCENTRATED MEA SOLUTIONS (ABB PROCESS) RESULTS IN THE MOST EXPENSIVE OPTION, WITH AN INCREASE IN THE VARIABLE COST OF NEARLY 100%, WHILE THE FG ONLY ACCOUNTS FOR A LESS THAN 50% RISE IN THE COST, FOLLOWED BY AMMONIA SOLUTIONS WITH A 35% INCREASE AND, FINALLY, BY MEMBRANE SYSTEMS WITH A 15% COST INCREASE. THE LOW COST FOR THE MEMBRANE SYSTEM IS MAINLY DUE TO THE LOWER AMOUNT OF FUEL USED IN COMPARISON WITH OTHER CASE STUDIES, ALTHOUGH THE CCS UNIT CONSUMES MORE ELECTRICITY THAN SOME OF THE OTHER CASES, AS SHOWN IN FIGURE 10.

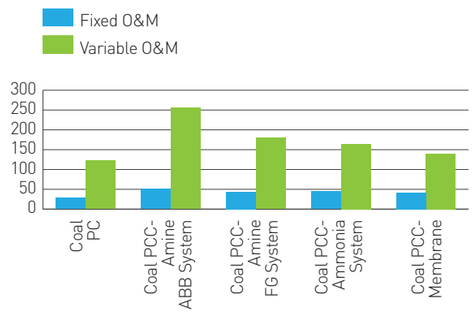

Figure 9. Fixed and variable O&M costs. Costs are expressed in constant 2011 £/yr.

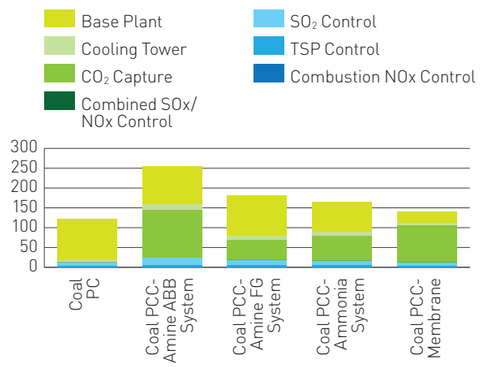

Figure 10. Breakdown of the variable O&M costs of single units. Costs are expressed in constant 2011 £/yr.

The calculated overall net plant efficiencies (LHV basis) for the chosen PCC technologies are shown in Figure 11. As expected, the efficiency decreases with the addition of all the types of carbon capture technologies. This is because of the energy penalty resulting from the capture and the compression of CO_2. The type of technology selected does have an impact on efficiency, with the FG amine and the ammonia systems being the least 'expensive' in terms of energy consumption, with a drop in the efficiency of about 13%, followed by the membrane system with a drop of about 14%. The biggest energy penalty is observed in the case of the ABB amine system, where a loss in the efficiency of about 18% is observed. This trend reflects once again the energy requirements of the technologies analysed. Employing membranes in the process results in the carbon capture plant consuming less energy, and overall the plant employs less fuel than in all the other cases investigated. The opposite is true for the ABB process which consumes more fuel, and therefore more energy is required to run the pollutant control systems, and the overall efficiency is calculated to be the lowest.

Annualised costs are calculated as the sum of the annualised capital cost and the O&M costs normalised by the power output of the plant. These costs represent the total revenue required and therefore the COE. The cost of electricity calculated for the five cases investigated is shown in Figure 12. As expected, the COE increases when adding carbon capture, and the extent of the rise in price is directly dependent on the specific capital cost as well as on the O&M costs. Therefore, the technology that provides electricity at the lowest cost is the FG amine system, while the highest cost is represented by the ABB amine system. Electricity obtained from plants using ammonia systems for carbon capture is cheaper than in the case of membranes. The difference in price is not as marked as in the case of the specific CAPEX due to the lower O&M costs associated with the use of membrane systems.

The results of this part of the study suggest that, for the conditions analysed here, the best option for carbon capture at this point in time is still the conventional amine FG process. However, alternative technologies such as membrane systems may become more attractive in different scenarios, such as lower construction costs and higher fuel prices.

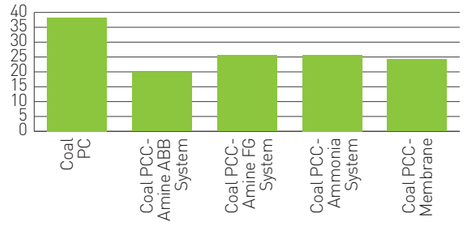

Figure 11. Comparison of the overall net plant efficiencies (LHV basis) obtained by the different post-combustion technologies analysed.

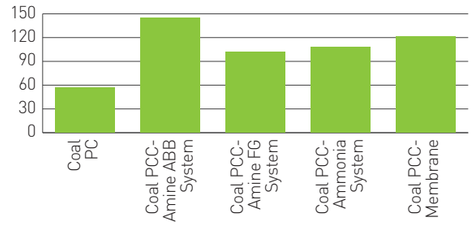

Figure 12. Comparison of the cost of COE obtained by the different PCC technologies analysed. Costs are expressed in constant 2011 £/MWh.

6.2 POST-COMBUSTION CAPTURE OPTIONS: NG-CCGT

A similar study to that conduced in the previous section is performed in this paragraph in order to assess the cheapest and most efficient post-combustion technology to be applied in natural gas turbine power stations. Graphs of the results obtained are shown in Figures 13 – 16.

Although for this technology the position of the power plant using ammonia CO_2 removal process is different from that observed in the previous case studies, being more expensive and only slightly more efficient than that using the amine ABB process, the final result is once again that currently the conventional FG process provides the best result in terms of initial investment, efficiency and cost of electricity for post-combustion carbon capture applied to power generation from natural gas.

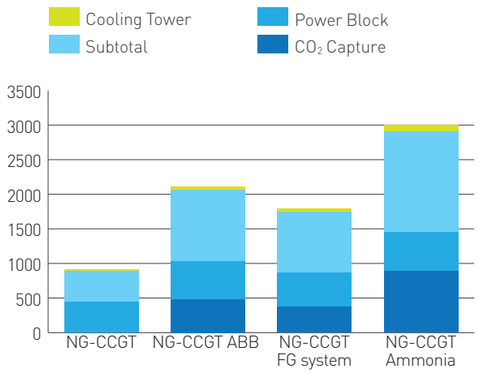

Figure 13. Total capital required per unit of energy produced from an NG-CCGT plant compared with the post-combustion options available for the same plant.

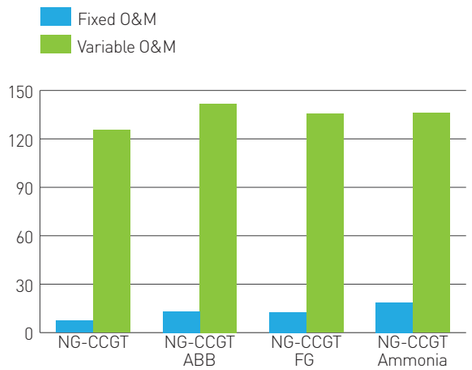

Figure 14. Fixed and variable O&M costs. Costs are expressed in constant 2011 £/yr.

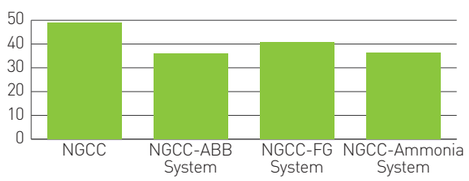

Figure 15. Comparison of the efficiencies obtained by the different post-combustion technologies analysed.

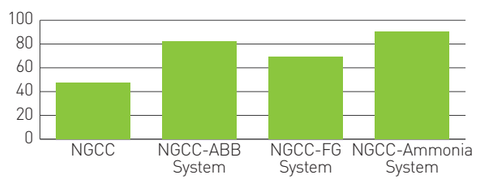

Figure 16. Comparison of the COE obtained by the different post-combustion technologies analysed. Costs are expressed in constant 2011 £/MWh.

6.3 COMPARISON OF DIFFERENT TECHNOLOGIES

This section includes an assessment of the technical and economical performances of three different technologies for power generation available in the UK. Pulverised fuel plants are compared to IGCC and NG-CCGT plants. Biomass co-firing systems are also investigated for the first two technologies as a sustainable alternative to dedicated coal power stations. Dedicated biomass studies are not included here since they cannot be applied to large scale systems, such as those investigated in this study (gross power output 650 MW). The effects of the addition of CCS units are also investigated. Because of the large number of cases analysed in this report, only the conventional FG amine process is included in this section for post-combustion technologies, as it was previously demonstrated to be the cheapest and most efficient option. Figure 17 shows the specific CAPEX for the various technologies both with and without carbon capture. As expected, the high cost of building an IGCC plant results in it being more expensive (by about 10%) than a PF plant. This is because of the state of readiness of these two technologies, as well as to the need for the ASU for the IGCC. The cost associated with the construction of the NG-CCGT is instead considerably lower; about 2.5 times cheaper than the PF plant. The structure of a conventional NG-CCGT plant is much simpler than that of a PF plant because of the avoidance of the need for environmental control units. The addition of the CCS unit generates a significant increase in the specific capital cost for each technology, with a marked difference between the chosen processes. Post-combustion capture doubles the cost of both the PF and NG-CCGT plants, while the oxy-fuel option is even more expensive. The pre-combustion option, applicable only to IGCC systems, increases the cost by 50%. Despite the rise in price due to the introduction of the CCS unit, the NG-CCGT plant still represents the cheapest option within those investigated. The replacement of coal with coal-biomass blends only marginally changes the building costs for the PF technology, with the co-firing case being slightly cheaper than coal because of the lower pollutants produced, and therefore smaller sizes required for the control units.

The difference is more pronounced in the case of the IGCC, where the cost is increased by about 8-9%. This is due to a difference in the production of the syngas for the two fuels. In the case of biomass blends, more water is required for the slurry due to the hygroscopic and hydrophilic nature of biomass, and consequently more oxygen is needed to reach a suitable temperature inside the gasifier [17]. This leads to the formation of a syngas containing more CO_2 and H_2O in the co-firing case, and therefore generating less energy than in the case of coal.

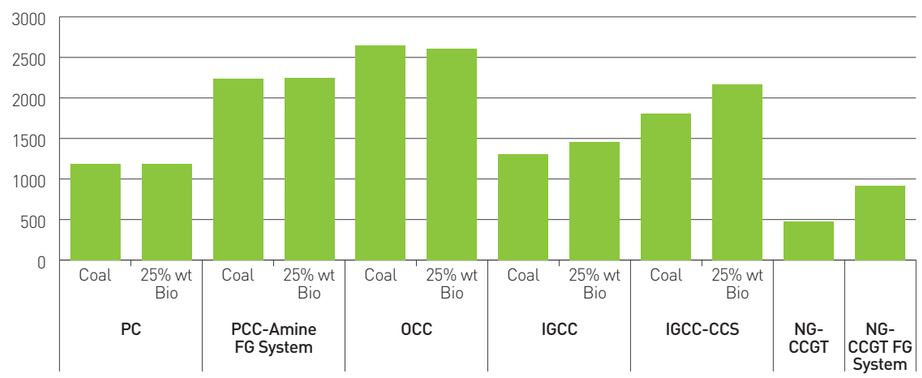

Figure 17. Total capital required per unit of energy produced for PF, IGCC and NG-CCGT plants. Costs for the introduction of CCS are also included. Costs are expressed in constant 2011 £/kW-net.

Differences are identified in the O&M costs when using different fuels, as shown in Figure 18 for both the fixed and variable O&M costs. Fixed O&M costs increase by about 45% with the introduction of pre-combustion units in an IGCC, by about 55% when using post-combustion technology in the PF plant and by about 65% when using oxy-combustion. However, they nearly double the cost in the NG-CCGT plant. It is important to note that the costs remain fairly constant for different fuels. This is because fixed costs include the operating, maintenance, administrative labour and the maintenance materials, and therefore they are more strictly related to the type of process used rather than the specific flow rates which depend on the type of fuel.

In contrast, variable costs consist of the cost of the fuel as well as the costs of the makeup sorbent, chemicals and other miscellaneous costs. Therefore, they are severely influenced by the fuel used because of the difference in feedstock costs, calorific value and specific composition of the fuels. Biomass is about three times more expensive than coal at the moment, and has a lower heating value because of its higher oxygen content. This leads to variable costs for co-firing plants, which are about 65% higher than for coal when no CCS is used and nearly 60% if an amine based post-combustion system is used. The use of oxy-combustion leads to an increase of about 50% for co-firing. The differences in the costs in the case of IGCC are more pronounced, being 75% without CCS and 65% with CCS. This is partially due to the additional use of water required for the slurry and mostly to the lower energy content of the syngas produced by the blend.

A comparison of the efficiencies is shown in Figure 19. IGCC plants using coal are more efficient than PF plants. However, the most efficient technology is the NG-CCGT because of the reduced energy penalty due to its clean combustion. On the other hand, the replacement of coal with biomass blends does not affect the PF plants while the efficiency in the IGCC is reduced. This is due to the different composition of the syngas produced from the two fuels, as explained previously in this section. The energy penalty associated with the introduction of carbon capture varies for different CCS techniques. Post-combustion technologies show the highest energy penalty, with values of about 12% for both solid fuel and natural gas, while a reduction in efficiency of about 10% occurs for oxy-fuel combustion and only 6% for pre-combustion in IGCC. These differences are mainly due to the energy required for the solvent regeneration in the case of MEA stripping.

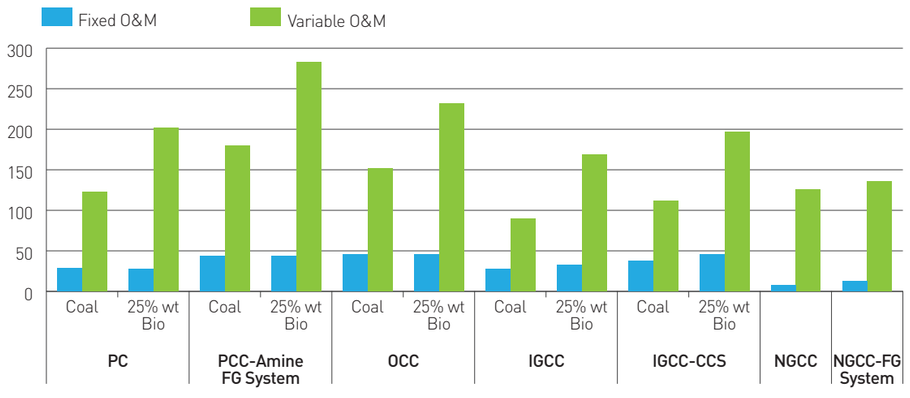

Figure 18. Fixed and variable O&M costs. Costs are expressed in constant 2011 £/yr.

A comparison of the data calculated in this study with those reported in the IEA review [6] reveals a general agreement within the figures if the due observations are made. The data predicted here for post-combustion technologies are about 2% higher than the average calculated in the IEA review although lying within the boundaries. The reason is mainly the higher capture rate considered in this study, about 6-7% higher than that reported in the review. The energy penalty for an oxy-fuel system is consistent with that reported in the review as the capture capacity is very similar. For a pre-combustion capture system the energy penalty appears slightly lower than that mentioned in the review, although within the boundaries. However, the case studies collected in the IEA review show that lower energy penalties are associated with systems using GE quench gasifiers, as it is the case of this report.

As a reflection of the higher O&M costs, the costs of electricity also vary accordingly, making the use of the biomass more expensive than that of coal in all cases, as shown in Figure 20. As a result, the cheapest option is again the natural gas, which keeps the lowest price for the electricity, even when CCS is considered. As expected, the use of blends of biomass and coal increase the cost of electricity by about 20-30%. However, it is important to bear in mind that these results refer to a specific scenario of fuel prices and no carbon taxes have been applied. The effects of the introduction of CCS as well as the use of biomass can vary if different assumptions are made. A comparison with the values of the cost of electricity reported in the IEA review shows a general agreement between the data in the literature and those calculated in this study, with the only exception of the NG-CCGT, being in this study much more expensive than in the review. This is mainly due to the assumption made on the gas price, in here considerably lower than in the IEA report. In the following section, we evaluate the possibility of different scenarios and the consequences these may have on the costs associated to the technologies analysed.

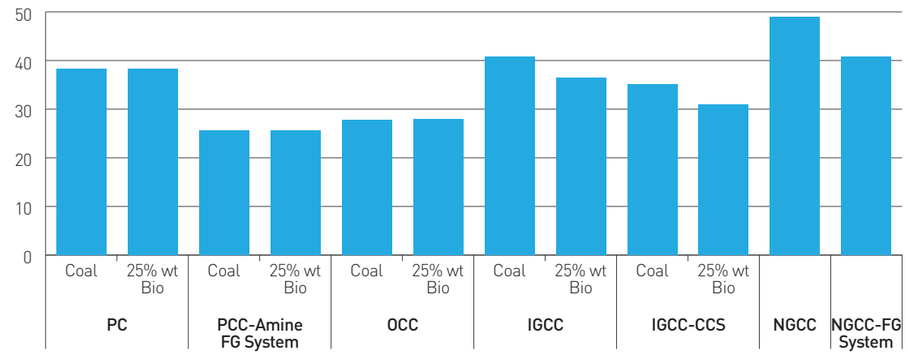

Figure 19. Comparison of the efficiencies obtained by the different technologies analysed, employing different fuels.

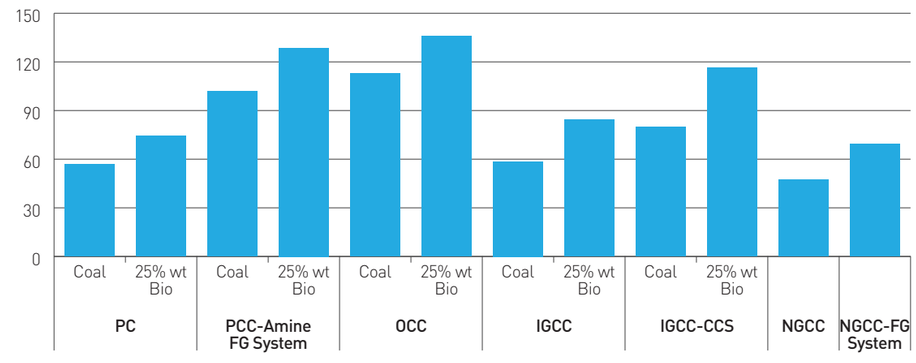

Figure 20. Cost of electricity generated by the different technologies analysed, employing different fuels. Costs are expressed in constant 2011 £/MWh.

An evaluation of the environmental effects of employing different technologies can also been made by comparing the emissions calculated for each case. Figures 21 and 22 show CO_2, NO_x and SO_x emissions respectively, for all the technologies analysed in this report. As expected, the addition of carbon capture reduces the CO_2 emission in all cases by about 95%, the value chosen for the capture efficiency. However, an interesting result with regards to NG-CCGT indicates that the CO_2 emissions are only one half of that in all the other technologies.

The highest NO_x emissions result from the use of post-combustion capture to PF plants. This is due to the nitrogen content of the fuel as well as the combustion in air. Oxy-fuel systems show sensibly lower NO_x emission from the stack. This is because of the different combustion environment, which employs oxygen that is 95% pure instead of air. IGCC and NG-CCGT systems show the lowest NO_x emissions because of the type of fuels that are burnt and the reduced amount of air used during the combustion process. SO_x emissions are highly mitigated in the case of post-combustion PF plants. This is because of the use of a SO_2 polisher prior to capture in order to enhance the capacity of the solvent towards CO_2. When pre-combustion is used in IGCC, the SO_2 emissions are drastically reduced since the solvent used for capture is the same as that used for the sulphur control. Therefore the sulphur left after the first Selexol scrubbing has a chance to be partially captured during the CO_2 sequestration process. In the case of NG-CCGT, the SO_x emissions are zero since the fuel contains no sulphur.

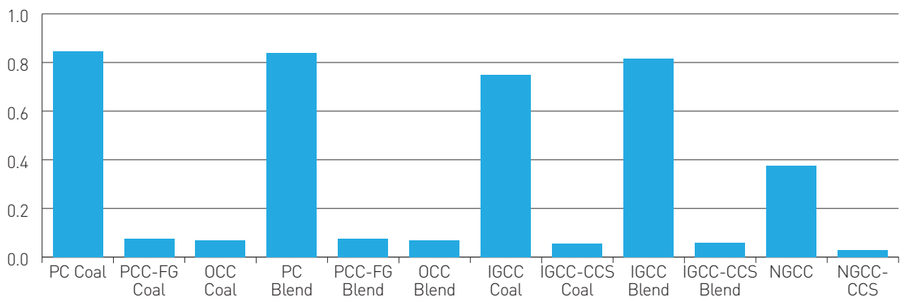

Figure 21. Cost of electricity generated by the different technologies analysed, employing different fuels. Costs are expressed in constant 2011 £/MWh.

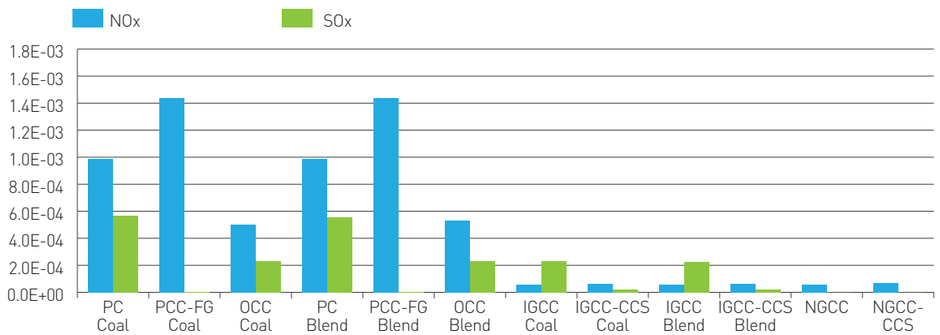

Figure 22. Cost of electricity generated by the different technologies analysed, employing different fuels. Costs are expressed in constant 2011 £/MWh.

7 UNCERTAINTY ANALYSES

7.1 EFFECTS OF FUEL COST VARIATIONS

The costs of the fuels used in this study are those published and available to the public without any restriction. However, real prices can be very different depending on the contracts, and the access to this information is limited due to confidentiality agreements. Moreover, the market can rapidly change, and therefore it is interesting to evaluate the effects of fuel price variations on the cost of electricity in order to gain a wider vision of the options available. Figure 23 shows the variation of the cost of electricity for all the technologies analysed.

The results shown in Figure 23 illustrate that in a scenario where the costs of all the fossil fuels increase along with biomass costs, NG-CCGT remains the cheapest technology, even when CCS is considered. On the other hand, the most expensive option is represented by oxy-fuel for both coal and biomass. The deterministic results, included in the previous section, were based on a cost of coal of nearly 2 £/GJ and a cost of gas of more than 3.5 £/GJ. Figure 23 shows that PF and IGCC plants using coal would compete with gas only if the cost of gas reached at least 4.5 £/GJ, while coal stayed constant. In the case of CCS being applied to all technologies, NG-CCGT with CCS would always be the cheapest unless coal prices drop below 1.5 £/GJ while gas prices increase to more than 5 £/GJ.

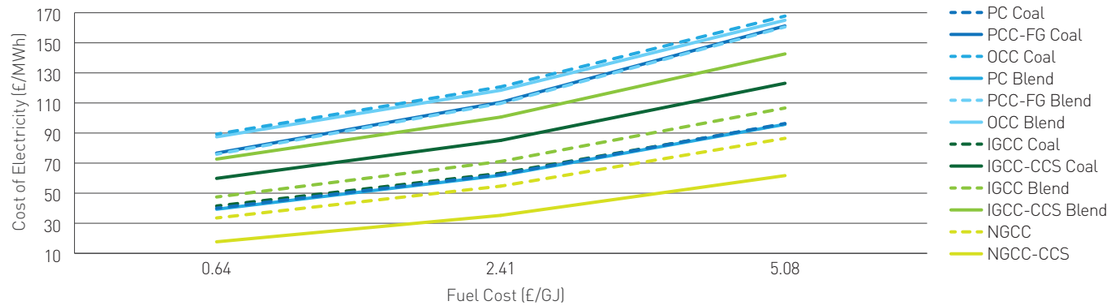

Figure 23. Diagram of the effects of fuel price variations on the cost of electricity generated by the different technologies analysed, employing different fuels. Costs are expressed in constant 2011 £/MWh.

7.2 EFFECTS OF CO_2 TAXES

One of the strategies considered in the UK to reduce CO_2 emissions is the introduction of carbon taxes on the CO_2 produced. If such an action was taken, technologies generating less CO_2 would be preferred by investors, with a consequent reduction in the emissions. Under these circumstances, carbon capture technologies would also become more appealing. In this section, the impact of different carbon taxes on the cost of electricity in the technologies analysed is investigated. Figure 24 shows the variation of the electricity price as a function of the CO_2 taxes. Despite the apparent complexity of Figure 24, a few considerations can simplify the interpretation: all the cases employing carbon capture show a fairly constant trend along the different carbon pricing scenarios. This is expected as the abatement of CO_2 makes the carbon taxes a marginal factor in the cost of electricity. The cases above 100 £/MWh are those already identified as the most expensive options, including oxy-fuel combustion and post-combustion, in particular when blends are used. This is because of the higher fuel price, the costs remain not competitive even with very high carbon prices (above 25 £/tonne). However, these results do not consider the possibility of the introduction of carbon credits when using biomass because of its carbon neutral nature.

Therefore, the application of CCS would lead to a negative carbon emission. Pre-combustion IGCC using blends also lies within the most expensive technologies, becoming even more expensive than the PCC employing coal. For scenarios of carbon tax higher than 17 £/tonne, if coal is used the cost is comparable to that for plants that do not use carbon capture, even becoming competitive or cheaper in certain scenarios, such as for carbon prices higher than 4-5 £/tonne, in which case IGCC with CCS becomes cheaper than IGCC without CCS and PF plants, both employing blends. It becomes competitive and cheaper than the same technologies employing coal only for carbon taxes above 22 £/tonne. As already shown from previous results, NG-CCGT without CCS shows the lowest cost of electricity, and it stays so even when high CO_2 taxes are applied. This is because NG-CCGT systems produce about half of the CO_2 produced by the use of solid fuels. When CCS is applied, the costs of electricity are also within the lowest, and for carbon pricing above 8 £/tonne NG-CCGT with CCS becomes cheaper than PF and IGCC employing coal.

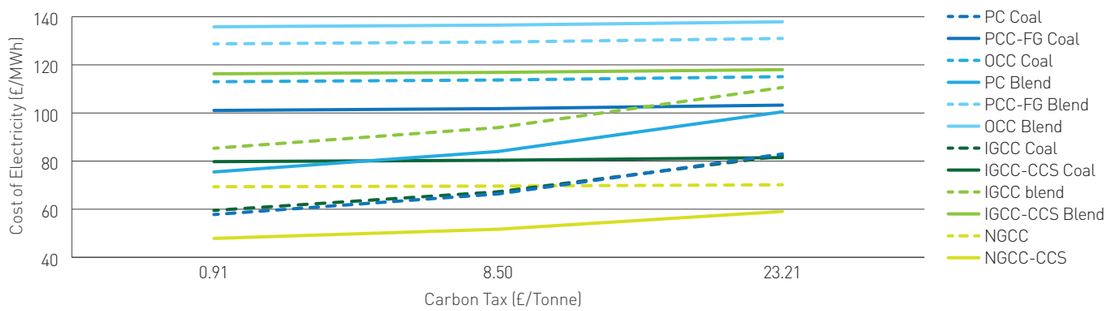

Figure 24. Diagram of the effects of a CO_2 price introduction on the cost of electricity generated by the different technologies analysed, employing different fuels. Costs are expressed in constant 2011 £/MWh.

7.3 EFFECTS OF VARIATIONS OF THE CAPACITY FACTOR

Another policy which may be adopted in future for carbon dioxide reduction is the reduction in the capacity factor for non-renewable technologies in favour of the growth of the renewable energy sector. In this scenario some of the technologies analysed here would be affected more than others. In particular, it is predicted that the capacity factor of coal-fired power plants will decrease to less than 40% [9]. IGCC power plants using coal can also be affected for the same reason, as well as gas power stations. However, the use of co-firing systems, partially renewable, may represent an advantage in this respect. Figure 25 shows how the cost of electricity can be affected by this type of policy. Different capacity factors affect the variable O&M costs. These results show that as the capacity factor decreases, the cost of electricity increases exponentially. This is because the reduction in O&M costs is not sufficient to nullify the severe reduction in power generation.

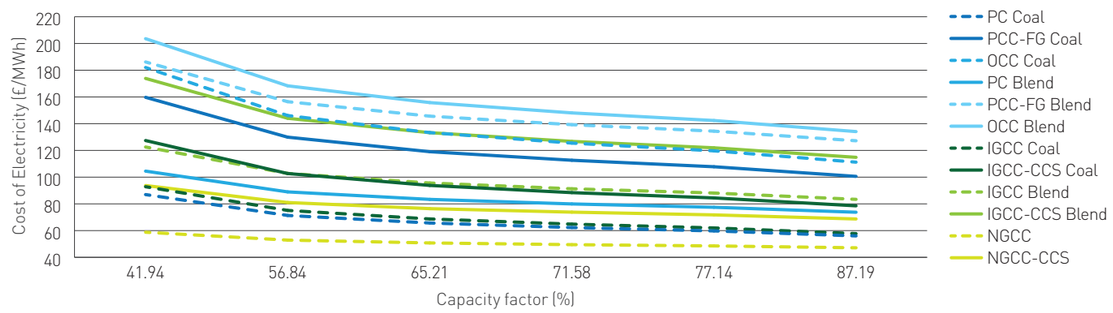

Figure 25. Diagram of the effects of a different capacity factors on the cost of electricity generated by the different technologies analysed, employing different fuels. Costs are expressed in constant 2011 £/MWh.

8 CONCLUDING REMARKS AND SUGGESTIONS FOR FUTURE RESEARCH

The scope of this report is an investigation of the economical and technical performances of three of the major sectors of combustion based power generation in the UK and the feasibility of employing carbon capture technologies, in order to establish the best option available at the moment. The technologies studied here are as follows: pulverised fuel, IGCC and NG-CCGT. Currently the first two options employ mainly coal; however co-firing systems have recently been introduced in order to mitigate the carbon footprint of these technologies. Therefore a comparison of the performances obtained by the use of a blend of 75 wt% coal and 25 wt% wood pellets and 100% coal is also performed in this study.

The conclusions obtained here are summarised as follows:

A DETAILED INVESTIGATION OF THE OPTIONS AVAILABLE FOR CARBON SEQUESTRATION IN POST-COMBUSTION PROCESSES, SUCH AS TWO DIFFERENT APPROACHES FOR MEA ABSORPTION, AMMONIA ABSORPTION AND PHYSICAL SEPARATION THROUGH POLYMERIC MEMBRANES, HAS LED TO THE CONCLUSION THAT THE CONVENTIONAL AMINE SCRUBBING PROCESS REPRESENTS STILL THE CHEAPEST AND THE MOST EFFICIENT OPTION. THIS IS DUE TO BOTH TECHNICAL REASONS AND THE STATE OF TECHNOLOGY ADVANCEMENT.

THE INITIAL INVESTMENT ASSOCIATED WITH IGCC PLANTS IS COMPARABLE, ALTHOUGH SLIGHTLY HIGHER THAN THAT OF PF PLANTS. NG-CCGT IS SIGNIFICANTLY CHEAPER. THE INTRODUCTION OF CCS TO ALL THE TECHNOLOGIES ANALYSED DRASTICALLY INCREASES THE COST OF CONSTRUCTION WHILE REDUCING THE EFFICIENCY OF THE PLANT, LEADING TO A GENERAL INCREASE IN THE SPECIFIC CAPEX (M£/MW). OXY-FUEL COMBUSTION REPRESENTS THE MOST EXPENSIVE OF THE TECHNOLOGIES ANALYSED, WHILE NG-CCGT IS THE CHEAPEST. NG-CCGT WITH CCS IS EVEN CHEAPER THAN THE OTHER TECHNOLOGIES WITHOUT CCS. PRE-COMBUSTION CAPTURE ON IGCC RESULTS IN CHEAPER THAN POST-COMBUSTION CAPTURE ON A PF PLANT. THE USE OF COAL-BIOMASS BLENDS, INSTEAD OF COAL, DOES NOT SIGNIFICANTLY AFFECT THE BUILDING COSTS OF THE INFRASTRUCTURES.

O&M COSTS, IN PARTICULAR THE VARIABLE COSTS, ARE MORE INFLUENCED BY THE TYPE OF FUEL USED. THEREFORE, EMPLOYING BIOMASS BLENDS OTHER THAN COAL RESULTS IN THE PROCESS BEING MORE EXPENSIVE. THIS ALSO AFFECTS THE COST OF ELECTRICITY, SO THAT POST-COMBUSTION OPTIONS USING BIOMASS PROVIDE THE MOST EXPENSIVE ELECTRICITY PRICE.

THE HIGHEST EFFICIENCY IS PROVIDED BY NG-CCGT PLANTS, WHILE THE PF ARE THE LEAST EFFICIENT. HOWEVER, THE REPLACEMENT OF COAL WITH BLENDS DOES NOT AFFECT THE EFFICIENCY IN THE PF PLANTS, WHILE IT SENSIBLY REDUCES THE EFFICIENCY IN IGCC SYSTEMS. THE INTRODUCTION OF CCS GENERATES A LOSS IN EFFICIENCY IN ALL CASES, WITH A MAJOR ENERGY PENALTY IN THE CASE OF POST-COMBUSTION. MINOR EFFECTS ARE THE LOSS FOR PRE-COMBUSTION IN IGCC.

DIFFERENT SCENARIOS OF FUEL COSTS CONFIRMED THE CONVENIENCE OF GAS POWER STATIONS ABOVE OTHERS. MOREOVER, THE INTRODUCTION OF CO_2 TAXES WOULD PENALISE THE TECHNOLOGIES THAT DO NOT USE CARBON CAPTURE AND THE RESULTS SHOW THAT NG-CCGT WITH CCS WOULD BE THE CHEAPEST OF ALL THE OPTIONS FOR TAXES ABOVE 8 £/TONNE. HOWEVER, WHEN CONSIDERING THE CO_2 CREDITS OBTAINED FOR THE USE OF CARBON NEUTRAL FUELS, SUCH AS BIOMASS, THE RESULTS MAY CHANGE SLIGHTLY.

THE CAPACITY FACTOR ALSO HAS A DIRECT IMPACT ON THE COST OF ELECTRICITY. THEREFORE, DIFFERENT DECISIONS ON THE POWER GENERATION POLICIES MAY STRONGLY INFLUENCE THE COSTS ASSOCIATED WITH THE RUNNING OF DIFFERENT TECHNOLOGIES.

In conclusion, NG-CCGT has proven to be the best option from all the aspects analysed in this report. In fact it is the cheapest option. It provides the lowest CAPEX investment and produces electricity at the lowest price and with the highest of the observed efficiencies. It also represents the cleanest fuel of those studied here, providing the lowest levels of pollutants. However, it is important to mention that, despite the technical observations, other concerns have to be applied to this technology, such as the security of supply and the geopolitical considerations associated with the origin of natural gas. These factors could significantly influence the final choice for the investment. It is important to note that this study is based on steady-state operations and does not take account of additional costs and performance limitations that the use of biomass co-firing systems might have due to shut-down and start-up issues related to slagging and fouling. Future studies could consider these effects with transient process modelling.

Another note is that this study relies on economic, technical and environmental assumptions based on the technologies as they are achievable today. Literature suggests that improvements can be obtained in certain areas, such as in the design of optimised cycles for IGCC plants [18,19] or in the capture technologies [20] by the use of more efficient amine solutions (e.g. mixtures of MEA and DEA), optimised membrane systems or even different processes such as chemical looping. An investigation into the potential realisable in the future can be of interest in addition to the information provided here. However, such a study would require a deep collaboration with industries already involved in pilot projects in order to attain reasonable technical and economic results.

REFERENCES

[1] Committee on Climate Change, Bioenergy Review – 7 December 2011.
Website: http://www.theccc.org.uk/reports/bioenergy-review.

[2] Rubin, E.S., Kalagnanam, J.R., Frey, H.C. and Berkenpas, M.B. 1997. Integrated Environmental Control Modeling of Coal-Fired Power Systems. Journal of the Air & Waste Management Association, 47: 1180-1186.

[3] Rubin, E.S., Chen, C. and Rao, A.B., 2007. Cost and Performance of Fossil Fuel Power Plants with CO_2 Capture and Storage. Energy Policy, 35(9): p.4444-4454.

[4] Rao, A.B., Rubin, E., 2002. A Technical, Economic, and Environmental Assessment of Amine-Based CO_2 Capture Technology for Power Plant. Greenhouse Gas Control. Environmental Science & Technology, 36: 4467-4475.

[5] Chen, C., Rubin, E.S., 2009. CO_2 Control technology effects on IGCC Plant Performance and Cost. Energy Policy, 37: 915-924.

[6] Matthias Finkenrath, IEA, 2011. Cost and Performance of Carbon Dioxide Capture from Power Generation.
Website: http://www.iea.org/publications/free_new_Desc.asp?PUBS_ID=2355.

[7] DECC commissioned, Mott MacDonald, June 2010. UK Electricity Generation Costs Update.
Website: http://www.decc.gov.uk/en/content/cms/about/ec_social_res/analytic_projs/gen_costs/gen_costs.aspx.

[8] Carnegie Mellon University's Integrated Environmental Control Model (IECM).
Website: http://www.cmu.edu/epp/iecm/index for IECM technical documentation updates and other documents.

[9] LCPD, Directive 2001/80/EC of the European Parliament and of the Council on the limitation of emissions of certain pollutants into the air from large combustion plants, in Official Journal of the European Communities. 2001.

[10] Berkenpas, M.B., Kietzke, K., Mantripragada., H., McCoy, S., Rubin, E., Versteeg, P.L. and Zhai, H., 2009. IECM Technical Documentation Updates – Final Report. Carnegie Mellon University.

[11] Rubin, E.S., Yeh, S., Antes, M., Berkenpas, M. and Davison, J., 2007. Use of Experience Curves to Estimate the Future Cost of Power Plants with CO_2 Capture. International Journal of Greenhouse Gas Control, 1(2): 188-197.

[12] Hansson, J., Berndes, G., Johnsson, F., Kjärstad, J., 2009. Co-firing biomass with coal for electricity generation—An assessment of the potential in EU27. Energy Policy, 37: 1444-1455.

[13] Berggren, M., Ljunggren, E., Johnsson, F., 2008. Biomass co-firing potentials for electricity generation in Poland – matching supply and co-firing opportunities. Biomass and Bioenergy.

[14] IEA Bioenergy, 2007. Global Co-firing Database. Version 1.02005, IEA Bioenergy Task 32: Biomass combustion and co-firing.
Website: www.ieabcc.nlS.

[15] UK COAL PLC Annual Report and Accounts 2010
Website: http://www.ukcoal.com/news-item&item=647653150975538

[16] E4tech prices for power sector (2010), based on £135/odt.

[17] He, W., Park, C.S., Norbeck, J.M., 2009. Rheological Study of Comingled Biomass and Coal Slurries with Hydrothermal Pretreatment. Energy Fuels, 23: 4763–4767.

[18] Karg, J., Haupt, G., Zimmermann, G., 2000. Optimised IGCC Cycle for Future Applications. 2000 Gasification Technologies Conference. San Francisco, California.

[19] Karg, J., 2009. IGCC experience and further developments to meet CCS market needs.
Website: http://www.energy.siemens.com/mx/pool/hq/power-generation/power-plants/integrated-gasification-combined-cycle/Igcc-experience-and-further-developments.pdf.

[20] US Dept of Energy, Carbon Sequestration Research and Development, 1999.
Website: http://www.fossil.energy.gov/programs/sequestration/publications/1999_rdreport/chap2.pdf.

ABBREVIATION KEY

CAPEX	Capital Expenditures
CCS	Carbon Capture and Storage
COE	Cost of Electricity
DEA	Diethanolamine
DECC	Department of Energy and Climate Change
DOE	US Department of Energy
ESP	Electrostatic Precipitator
FGD	Flue Gas Desulphurization
IECM	Integrated Environmental Control Model
IGCC	Integrated Gasification Combined Cycle
MEA	Monoethanolamine
MW_g	Mega Watt gross
MW_{net}	Mega Watt net
NG-CCGT	Natural Gas Combined Cycle Gas Turbine
OCC	Oxy-fuel Combustion Capture
O&M	Operation and Maintenance
PF	Pulverised Fuel
PCC	Post-Combustion Capture
SCC	Selective Catalytic Control
SRU	Selexol Removal Unit
TCC	Total Capital Cost
TCR	Total Cost Required
WCT	Wet Cooling Tower
WGS	Water Gas Shift

CONTACTS

Centre for Low Carbon Futures

Director: Jon Price

jon.price@lowcarbonfutures.org

Centre for Low Carbon Futures

IT Centre

York Science Park

York YO10 5DG

Telephone: +44 (0)1904 567714

www.lowcarbonfutures.org

Twitter: @clcfprojects

ABOUT US

The Centre for Low Carbon Futures is a collaborative membership organisation that focuses on sustainability for competitive advantage. Founded by the Universities of Hull, Leeds, Sheffield and York, the Centre brings together multidisciplinary and evidence-based research to both inform policy making and to demonstrate low carbon innovations. Our research themes are Smart Infrastructure, Energy Systems and the Circular Economy. Our activities are focused on the needs of business in both the demonstration of innovation and the associated skills development. Registered in the UK at Companies House 29th September 2009 Company No: 7033134.

CLCF is grateful for funding and support from Accenture, the Beijing Institute of Technology, British Deputy High Commission of India, British Embassy Tokyo, China Beijing Environmental Exchange (CBEEX), Committee on Climate Change of the UK, the Energy Intensive Users Group, ICLEI-Local Governments for Sustainability (Tokyo), Indian Chamber of Commerce, International Institute for Sustainable Development (IISD), Jadavpur University, the Regional Development Agency, the Trades Union Congress, the UK Department of Energy and Climate Change, Tecnológico de Monterrey Mexico City, the University of Birmingham, the University of Hull, the University of Leeds, the University of Sheffield and the University of York.

ISBN 978-0-9575872-4-3